FSR

Clamp

QUICK FACTS

- Robust rubber gasket in the entire clamp
- Fits both joint dimensions and nipple dimensions
- Adjustable quick-action latches
- Very simple to install
- Type-approved to Tightness Class C

Swegon

Technical description

Design

Easy-to dismantle jointing coupling with quick-action latch. Adapted for circular ventilation ducts and duct components. The clamp is well-suited for use for the simple dismantling of duct components when cleaning, for instance.

Consists of a clamp that has a robust rubber gasket on the inside. Two adjustable quick-action latches are used for fastening and unfastening the clamp over the connecting duct component.

Tightness class C according to SS-EN 12237.

Materials and surface treatment

The clamp is made of galvanized sheet steel. The gasket is made of Polyethene without flame retardant.

Project planning

The installation space in the duct should be made so large that the duct component can be removed in a completed system. The clamp covers and seals the space that has arisen there. In that one end of the duct component is inserted into the duct, only one clamp is required per duct component. Duct hangers should be placed to ensure continued stability even when the duct component is removed.

Max. permissible ambient temperature: 60°C.

Installation

See Figure 1.

Maintenance

The clamp can be cleaned, if necessary, using lukewarm water with dishwashing detergent added.

Environment

The Building Materials Declaration is available from www.swegon.com.

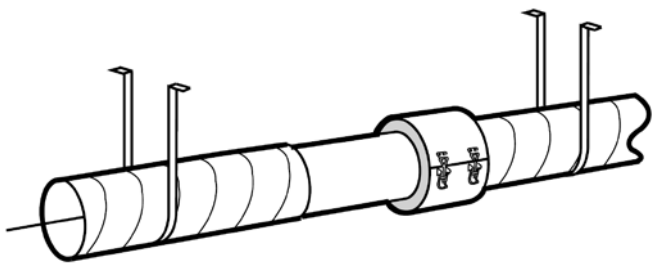

Figure 1. Installation. Free space between duct ends = Total length of the duct component + 10 mm.

Dimensions and Weights

Size	Dimensions (mm)		Weight (Kg)
	Ød	ØD	
100	99	125	0.37
125	124	150	0.42
160	159	185	0.58
200	199	225	0.6
250	249	275	0.7
315	314	340	0.8
400	399	425	1.15
500	499	525	1.4
630	629	655	1.5

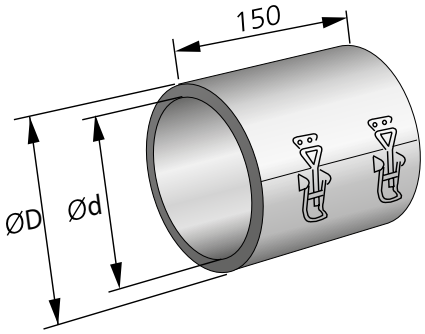

Figure 2. Dimensions.

Ordering key

Product

Clamp	FSR	c	-aaa
Version:			
Dimension: 100, 125, 160, 200, 250, 315, 400, 500, 630			

Specification text

Swegon's type FSRc clamp for circular ducts, with the following functions:

- Adjustable quick-action latch
- 15 mm thick rubber gasket
- Takes up the difference between the duct and nipple dimensions

Size: FSRc - aaa xx items

Swegon reserves the right to alter specifications. 20230621